15” 5-wire resistive touchscreen

ProLite T1531SR-W5 is based on 5 wire resistive touch technology. The price / performance ratio is ideal for the budget conscious user while quality and performance are certainly not compromised. The display inputs include both analogue and digital (HDMI and DisplayPort) with touchscreen connectivity via USB offering great flexibility. A solid and steady base supports the touchscreen with an adjustable stand offering full 90-degree angles. The ProLite T1531SR-W5 can be used in a variety of environments, especially recommended for shops, restaurants and industrial purposes. Available in black and white.

Touch technology - Resistive

5-wire resistive touchscreens are very durable and can be used in a variety of environments. They are especially recommended for shops, restaurants and industrial purposes.

ip54

The IP Code classifies how resistant a device is to foreign objects and moisture. IP54 means that the monitor will operate in dusty conditions, and will resist splashing water.

01 DISPLAY CHARACTERISTICS

Diagonal	15", 38cm
Panel	TN LED
Native resolution	1024 x 768 (0.8 megapixel)
Aspect ratio	4:3
Brightness	370 cd/m² typical
Brightness	300 cd/m² with touch
Static contrast	700:1 with touch
Light transmittance	80%
Response time	8ms
Viewing zone	horizontal/vertical: 170°/160°, right/left: 85°/85°, up/down: 80°/80°
Horizontal Sync	31.5 - 60.KHz
Vertical Sync	56 - 75Hz
Viewable area W x H	304 x 228mm, 12 x 9"
Pixel pitch	0.297mm
Bezel colour and finish	matte, white

02 TOUCH

Touch technology	serial resistive
Touch points	1
Touch method	stylus, finger, glove
Touch interface	USB
Supported operating systems	All iiyama monitors are Plug & Play and compatible with Windows and Linux. For details regarding the supported OS for the touch models, please refer to the driver instruction file available in the downloads section.

03 INTERFACES / CONNECTORS / CONTROLS

Analog signal input	VGA x1
Digital signal input	HDMI x1 DisplayPort x1
Audio output	Speakers 2 x 1W
HDCP	yes

04 FEATURES

Impact testing	IP54 (front)
OSD key lock	yes

05 GENERAL

OSD languages	EN, DE, FR, ES, IT, CN, JP
Control buttons	Menu, Scroll up/ Brightness, Scroll down/ Mute, Select, Power
User controls	contrast, brightness, auto adjust, H.position, V.position, H.size, fine, OSD H.position, OSD V.position, OSD timeout, reset, input select, OSD language, colour temperature, volume, mute
Convenience	Kensington-lock™ prepared
Plug&Play	DDC2B

06 MECHANICAL

Tilt angle	90° up; 5° down
VESA mounting	100 x 100mm
Cable management system	yes

07 ACCESSORIES INCLUDED

Cables	power, USB, HDMI, Audio, DP
Guides	quick start guide, safety guide
Other	Touch Panel Driver Disk (CD-ROM)
Cable cover	yes

08 POWER MANAGEMENT

Power supply unit	internal
Power supply	AC 100 - 240V, 50/60Hz
Power usage	16W typical, 2W stand by

09 SUSTAINABILITY

Regulations	CB, CE, TÜV-Bauart, CU, cULus, VCCI

10 DIMENSIONS / WEIGHT

Product dimensions W x H x D	351 x 306 x 201mm
Weight (without box)	4.8kg

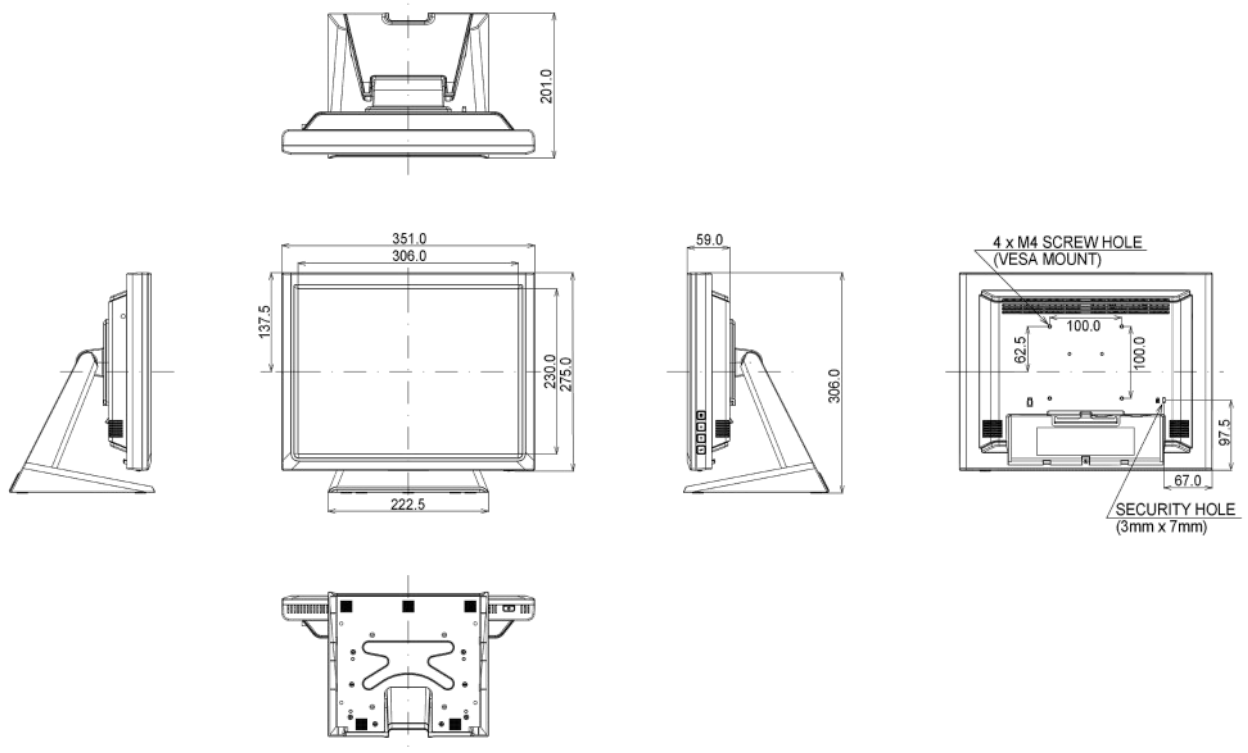

All trademarks and registered trademarks acknowledged. E & O E. Specification subject to change without notice. All LCD's comply with ISO-9241-307:2008 in connection with pixel defects.

© IIYAMA CORPORATION. ALL RIGHTS RESERVED