TP-LINK
The Reliable Choice

Quick Installation Guide

802.11ac Wireless Dual Band PCI Express Adapter

* Archer T9E is used for demonstration in this QIG.
  Image may differ from actual product.

7106505930 REV2.1.0

For more information, please visit our website: http://www.tp-link.com

1 Connect to a Computer

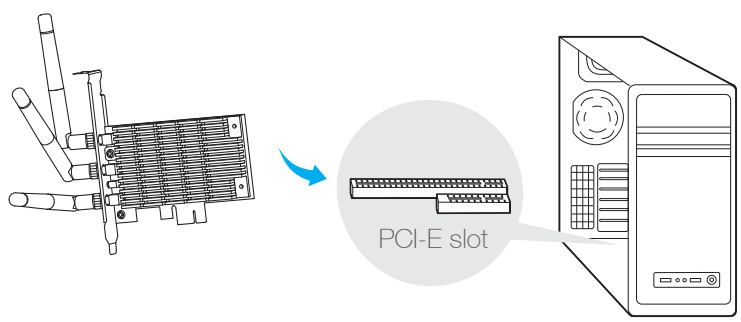

Insert the adapter into your computer by following these steps:

1. Install the antennas.
2. Turn off your computer, unplug the power cord and other connected peripheral devices to your computer.
3. Remove the case panel. Locate an available PCI-E slot and remove its slot cover.
4. Carefully insert the adapter into the PCI-E slot and secure it with the retaining screw.
5. Replace the case panel.
6. Reconnect the power cord and turn on your computer.

Note: In Windows XP, a Found New Hardware Wizard window will appear when the adapter is detected. Please click **Cancel**.

2 Install Driver and Utility

You can also download the driver and utility at www.tp-link.com

A: Insert the CD and run the **Autorun.exe** from the pop-up Autoplay window.

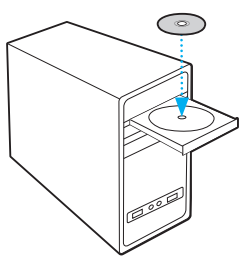

Note: In some operating systems, the CD screen will pop up automatically. Otherwise, run the CD manually.

B: Select the model and click **Install Driver and Utility**, then follow the InstallShield Wizard to complete the installation.

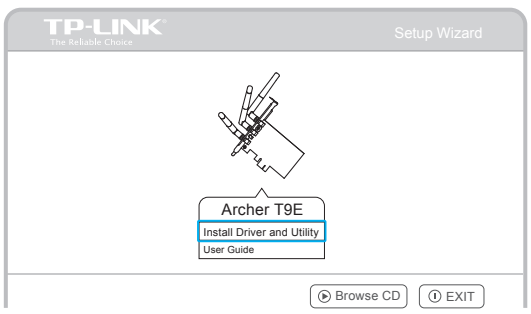

3 Join a Wireless Network

For Windows 8.1/10, TP-LINK Utility is not supported, please use the Windows built-in Wireless Utility to join a network.

Option 1: Via TP-LINK Utility

Select your preferred wireless network from the pop-up utility window and click **Connect**. The symbol indicates a successful connection.

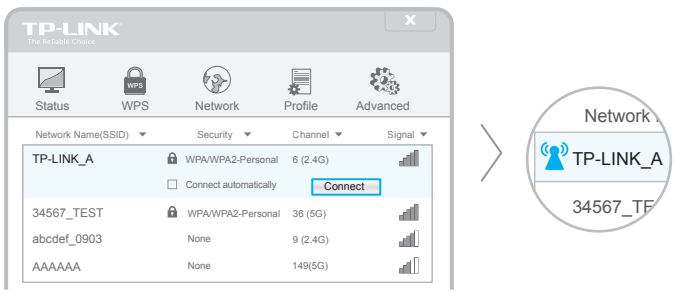

Option 2: Via Windows Wireless Utility

Click (Network icon) on the system tray, select your Wi-Fi network, and click **Connect**.

Note: In Windows XP, you need to close the TP-LINK Utility before using the Windows Wireless Utility.